MOUNTING INSTRUCTIONS
BUCKIN' ROLL TANK BAG™

NOTE: Before mounting, carefully read through these instructions start to finish. Failure to follow recommended mounting and installation instructions voids warranty. Manufacturer is not liable for any damage, injury or death that results from improper use and installation of products. By installing these products, user accepts all liabilities, terms and conditions outlined in the Liability & Warranty statement included here.

GIANT LOOP®
giantloopmoto.com

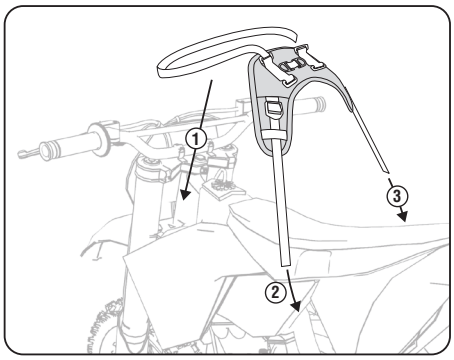

THESE INSTRUCTIONS ARE GENERALIZED for Dual Sport/Enduro Bikes. Mounting points where webbing is secured vary with every make and model of motorcycle. Take a few minutes to familiarize yourself with the Buckin' Roll Tank Bag and how it will mount to your motorcycle. Stuff your Buckin' Roll Tank Bag's pockets to fill the bag's volume, allowing you to see the tailored shape and to become familiar with the bag's fit on your machine.

ADVENTURE BIKES

On some adventure touring motorcycles, engine guards and alternative mounting points maybe used. On the BMW 1200GS, remove seat and thread webbing around frame rails. Replace seat, then tighten straps.

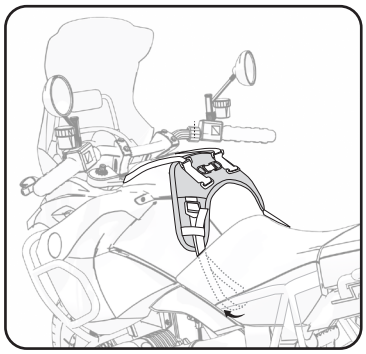

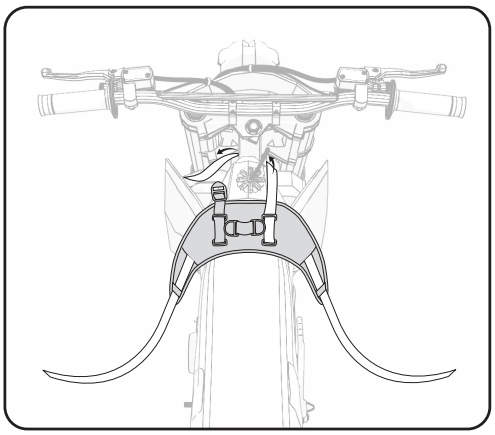

1 Thread the forward webbing around the frame head tube and back into the thumb-lock buckle on harness. Adjust the front mount point to fix the front/back position of the harness to provide fuel fill access and full swing of the handlebars. Do not damage or interfere with any wiring, cables, other controls.

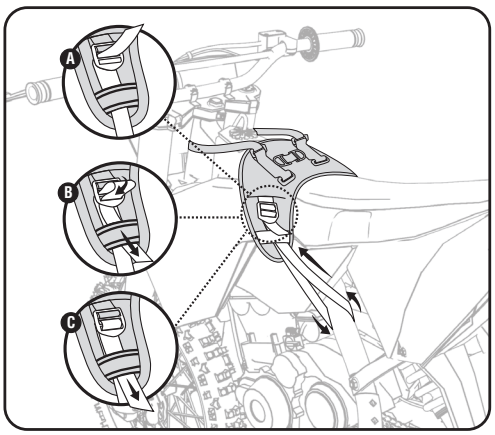

2 Locate the appropriate connection points on each side of frame. Use the farthest forward positions available. Loop each side's webbing straps around frame/subframe and back up through reflective tabs and thumb-lock buckles. DO NOT allow webbing to contact exhaust! Tighten all three points of contact and secure all loose webbing ends.

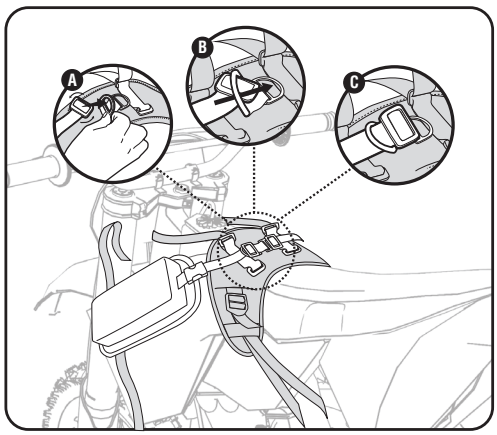

3 Pannier Pockets: Slide tri-glide on Pannier Pockets' rear straps through D-ring on Tank Bag harness.

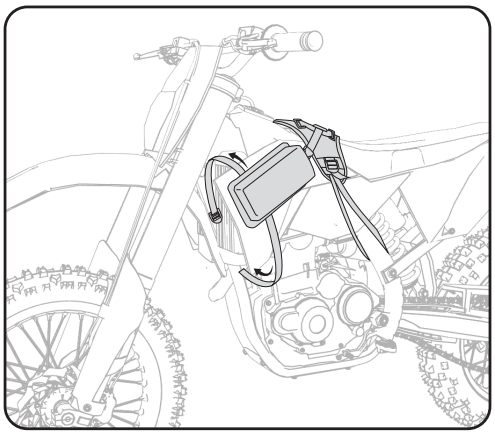

4 Secure front Pocket straps around cowling, tank vents, tank or radiator mounts. Tighten straps and secure loose webbing ends. Reinforce and stabilize with Pronghorn Straps, if needed.

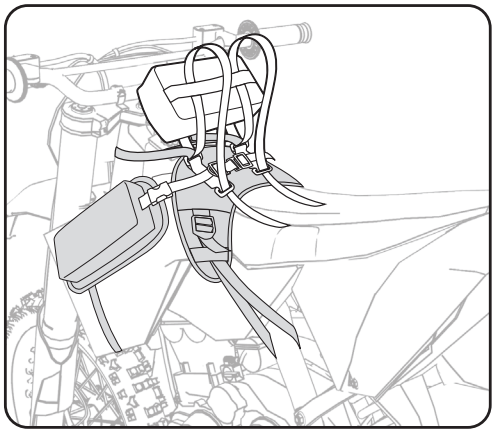

5 Center Pouch: Position Pouch with zipper opening facing rider. Weave webbing cam buckle straps through loops and daisy chain slots.

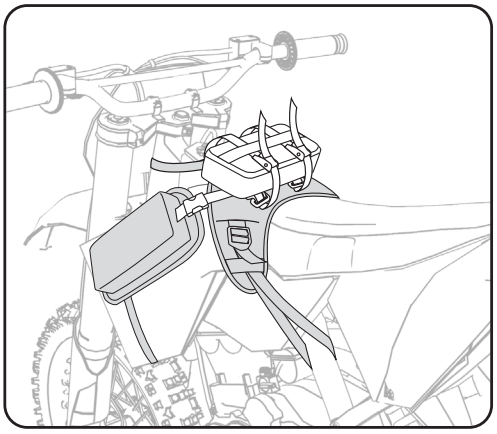

6 Re-tighten all connections and secure all loose webbing ends. Grip it and rip it!

PACKING TIPS

- The Buckin' Roll Tank Bag is Adventure Proof - not waterproof. Pack moisture-sensitive gear in plastic bags or waterproof sleeves inside the rugged trucker's tarp Bomb Shell™.
- Do not overstuff or over-load Tank Bag. The challenge should be to pack as little as necessary to be safe, comfortable and self-sufficient. Go light. Go fast. Go far.
- Pack all sharp and/or hard items inside a protective layer. For example, create a sleeve for tire irons from a section of old inner tuber, pack tools in rolls and wrap other hard items in clothing.
- Add Pronghorn Straps around pockets for ultimate off-road riding stability.
- Visit our website at GiantLoopMoto.com for more tips from riders and instructions.

CARING FOR BUCKIN' ROLL TANK BAG™

- Treat zippers with care and respect. Keep them clean and lubricated with zipper wax or lube. Don't yank or pull - take an extra second to make sure both zipper sides are aligned.
- Keep all webbing away from hot exhaust.
- Avoid sharp metal edges. Protect webbing with inner tube sleeve to prevent abrasion.
- Secure loose webbing ends when riding. Check and retighten all connections at each stop.
- Avoid exposure to insect repellants containing DEET.
- Hand wash Tank Bag with mild soap (like Simple Green), rinse with clean water and air dry. DO NOT MACHINE WASH OR DRY.
- Prevent mold, mildew and funky stench by unpacking wet gear, rinsing thoroughly with fresh water and airing dry.

GIANT LOOP®
giantloopmoto.com

BUCKIN' ROLL TANK BAG™

TERMS OF USE, LIMITED LIFETIME WARRANTY AND LIABILITY WAIVER

Giant Loop LLC, an Oregon company, having its principal place of business in Bend, OR ("Giant Loop") offers its motorcycle bag (the "Product") with the terms, conditions and notices as follows:

TERMS OF USE
This Product is offered to you conditioned upon your acceptance without modification of the terms, conditions, and notices contained herein. Installation and/or use of this product implies acceptance of all such terms, conditions, and notices. If you do not agree to these terms, do not buy the Product. If you have already bought the Product and do not agree to these terms, return this Product promptly, including the packaging and all written materials, to Giant Loop.

LIMITATION OF LIABILITY AND LIMITED LIFETIME WARRANTY DISCLAIMER
Giant Loop offers a money-back guarantee provided the Product is returned, in unused condition with original receipt, within 30 days of purchase. Giant Loop reserves the right to subtract a 15% re-stocking fee from the refund amount. Standard shipping fees will apply to exchanged items and are paid by the customer. If you receive damaged or defective goods or items that you did not order, the items must remain unopened and unused so we can credit you in full, including return shipping if it is a result of our error, mishandled shipping or manufacturer's defect.

Giant Loop provides to the original purchaser a limited lifetime warranty against defects in materials or craftsmanship if purchased directly from a Giant Loop authorized dealer. This warranty covers defective materials and craftsmanship only, and does not include damage due to normal wear and tear or misuse. Failure to comply with the included instructions for this Product will void the limited lifetime warranty. If defects in the materials or craftsmanship of the Product exist, notify Giant Loop immediately of the defect. Giant Loop will provide for repair or replacement of the Product, after Giant Loop has determined, in our sole discretion, that a defect is present. Proof of purchase is required to utilize the limited warranty provisions.

If you experience any problems with the Product within the warranty period please return the Product or contact us for prompt repair or replacement at our discretion: ride@giantloopmoto.com, 458-206-9113.

Excepting the warranties stated in the preceding paragraph, Giant Loop hereby disclaims all other warranties and conditions with regard to the Product including all implied warranties and conditions of merchantability and fitness for a particular purpose. There are no warranties which extend beyond the description on the face hereof. Giant Loop does not warrant against damages or defects arising out of use or installation of the Product. Installation instructions are provided for your convenience. Giant Loop is not responsible for any damages arising out of the installation, improper or otherwise, of the Product. No warranty of any kind, expressed or implied, is made regarding the safety of this Product.

To the extent allowed by law, Giant Loop shall not be held liable for any direct, indirect, punitive, incidental, special or consequential damages arising out of, or connected with, the use or misuse of this Product. Buyer assumes all risks and liability arising from use of this Product.

ENTIRE AGREEMENT
This document states the entire obligation of Giant Loop with respect to the Product. If any part of this agreement is determined to be void, invalid, unenforceable or illegal, including, but not limited to the warranty disclaimers and liability limitations set forth above, then the remainder of the agreement shall remain in full force and effect.

APPLICABLE LAW
This agreement is governed by the laws of Oregon, USA. You hereby consent to the exclusive jurisdiction and venue of the courts of Oregon, USA, in all disputes arising out of or relating to the use of this product.